ITEMS	SPECIFICATIONS	NOTES
RATED VOLTAGE	7.0 V	
RATED CURRENT	0.58 A/PHASE	
MAX. INPUT	8.12 W	
STEP ANGLE	3.6 DEG	
STEP ACCURACY(POSITION)	±5.0 % MAX	
SHAFT ROTATION	BI-DIRECTIONAL	1
MAX. STATIC TORQUE	1080 g-cm MIN.	2
PULL OUT TORQUE	500 g-cm MIN. AT 1000 PPS	3
PULL OUT TORQUE	—— g-cm MIN. AT —— PPS	3
MAX. SLEW SPEED	—— PPS	3
WINDING RESISTANCE	12 OHM ±10%	
WINDING INDUCTANCE	11.6 mH REF	4
INSULATION RESISTANCE	100 MOHM MIN.	5
DIELECTRIC STRENGTH	500 V AC	6
TEMPERATURE RISE	80 DEG. C MAX.	7
CLASS OF INSULATION	B	
RADIAL PLAY	0.03mm MAX. (1350g LOAD)	9
END PLAY	0.3 mm MAX. (1350g LOAD)	
ROTOR INERTIA	17 g-cm²	
WEIGHT	250 g REF.	

NOTES

1. ROTATION OF SHAFT TO BE CW FACING MOUNTING END WHEN SEQUENCED AS FIG.2
2. AT RATED CURRENT AND TWO PHASES ON.
3. SPECIFICATIONS APPLY DRIVER SI-7330A Vcc=23.8V, 0.55A/PH, TESTER PV900 AND SWITCHING SEQUENCE AS SHOWN FIG2.
4. MEASURED AT 1 KHz 1 V RMS.
5. WITH 500V DC APPLIED BETWEEN WINDING AND CASE.
6. THERE SHALL BE NO BREAKDOWN AT 500V AC 50/60 Hz APPLIED FOR 1 MINUTE BETWEEN WINDING AND CASE.
7. DETERMINED BY MEANS OF RESISTANCE METHOD WITH TWO PHASE ENERGIZED SIMULTANEOUSLY AT RATED VOLTAGE.
8. ALL SPECIFICATIONS APPLY BEFORE TEMPERATURE RISE AT ROOM TEMPERATURE ONLY.
9. MEASURED AT 1cm FROM MOTOR SURFACE.

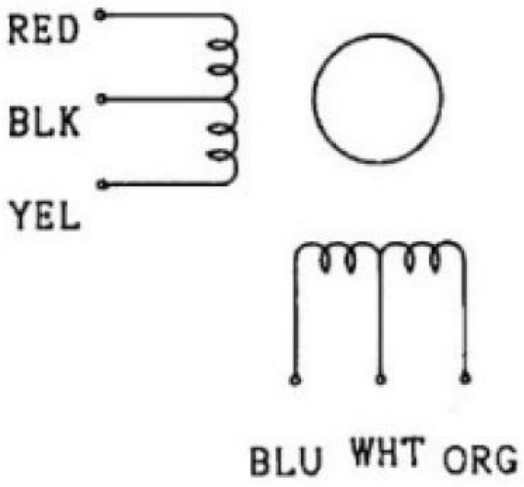

STEP	RED	BLU	YEL	ORG	BLK-WHT
1	−	−			+
2		−	−		+
3			−	−	+
4	−			−	+

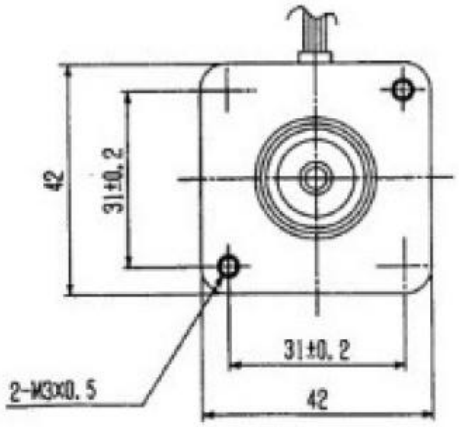

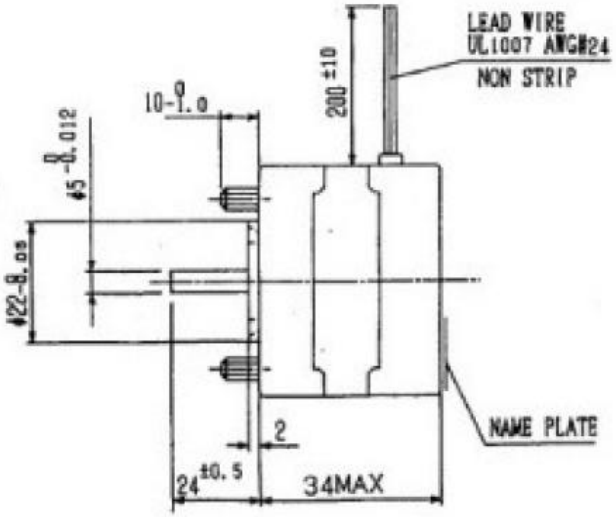

MARK	DATE	REASON / ECN NO.	ENGINEER	APPROVED

ミネベア株式会社
MINEBEA CO., LTD.

APPROVED	CHECKED	DRAWN
	RRHR	KWN

UNIT mm
SCALE

寸法 L	公差
L≦6	±0.2
6<L≦30	±0.5
30<L≦120	±0.8
120<L≦315	±1.2
315<L≦1000	±2.0
角度 DEG	±2.0

一般公差 TOL

SHEET 1/1
DATE 95/03/08
品名 TITTLE
ミニアングルステッパー
MINI ANGLE STEPPER
図面番号 DWG NO.
17PS-C058-01V
REV